REVISIONS				
CHANGE ORDER	LTR	DESCRIPTION	DATE	APPROVED
Q09035	1	ADDED TOLERANCES & PART NO'S	10/28/09	

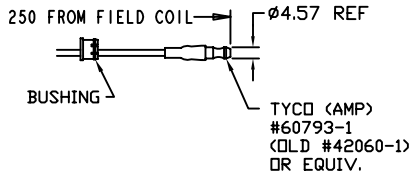

TERMINAL LEAD DETAIL

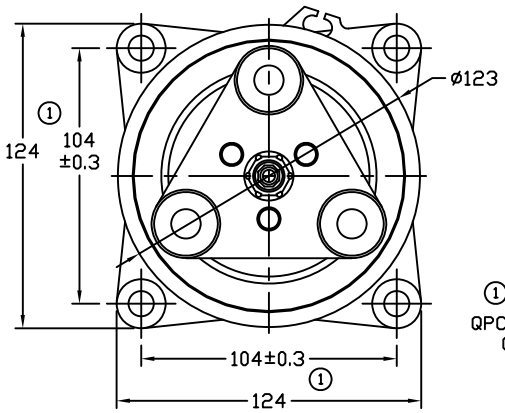

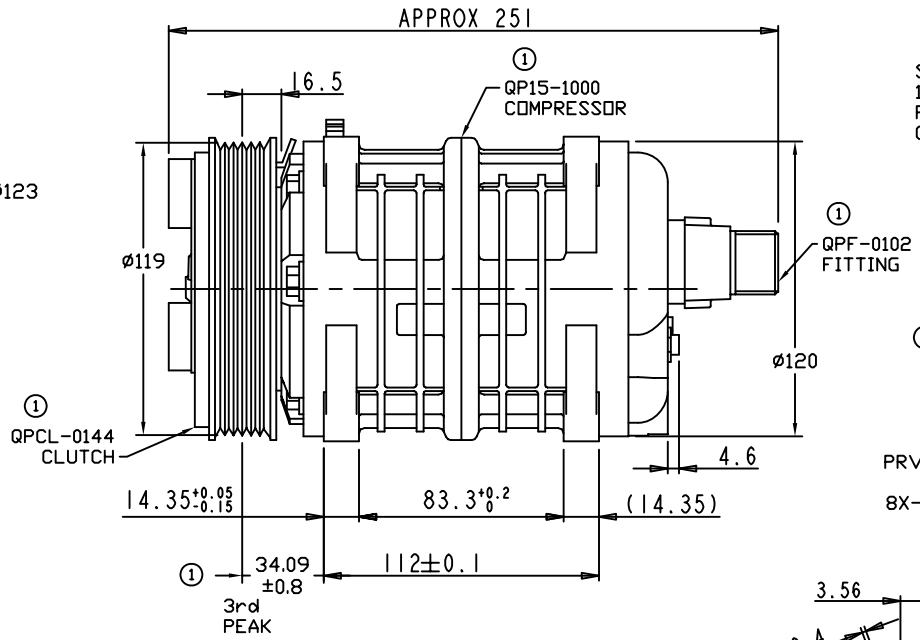

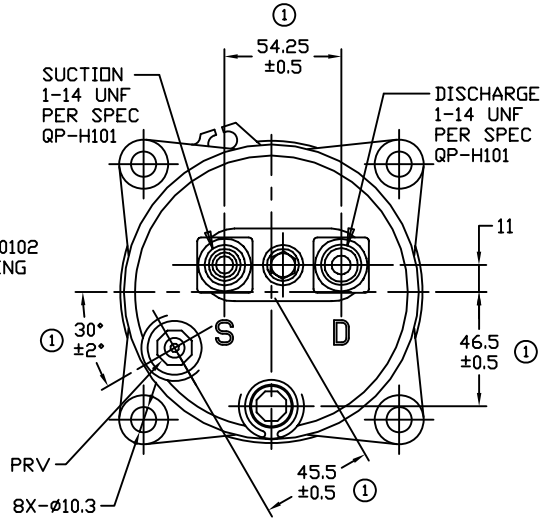

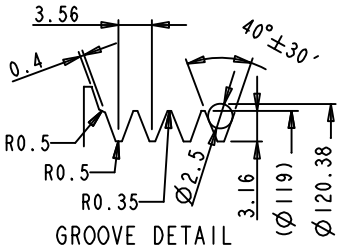

GROOVE DETAIL

CLUTCH SPECIFICATIONS:

1. VOLTAGE.....12 VDC
2. BELT..... PV6
3. STATIC TORQUE
   INITIAL.....35 Nm (3.5 Kgfm)
   AFTER BURNISHING.....49 Nm (5 Kgfm)
4. MAX POWER CONSUMPTION.....45W @ 25°C
5. ROTATION DIRECTION.....CW OR CCW
6. WEIGHT.....2.28 Kg

COMPRESSOR SPECIFICATIONS:

1. MODEL..... QP15HD
2. NUMBER OF CYLINDERS.....6
3. BORE X STROKE.....36 X 24.0 mm
4. DISPLACEMENT.....146.7 cm^3/REV
5. SPEED RANGE.....700 - 6000 RPM
6. ROTATION DIRECTION.....CW OR CCW
7. REFRIGERANT.....R-134a
8. LUBRICANT..... PAG 46 150+20 cm3
9. WEIGHT.....4.4 Kg

UNLESS OTHERWISE SPECIFIED DIMENSIONS ARE IN MM. INTERPRET DIM AND TOL PER ASME Y14.5M - 1994

THIRD ANGLE PROJECTION

FINISH

CAD GENERATED DRAWING, DO NOT MANUALLY UPDATE

DRAWN	GLB	DATE 06/27/08
CHECKED		
APPROVED		
ENG APPVL		

QUE PRODUCTS, LLC

TITLE
COMPRESSOR ASSEMBLY
QP15HD, HORIZONTAL FITTING
PV6 119mm 12V 3-EYE

SIZE	CODE IDENT NO	DWG NO	REV
A		QP15-1330	1

SCALE NONE | SHEET 1 OF 1