REVISIONS				
CHANGE ORDER	LTR	DESCRIPTION	DATE	APPROVED

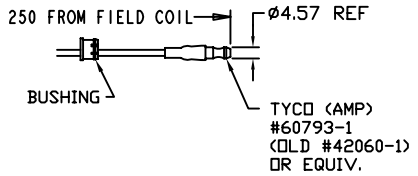

TERMINAL LEAD DETAIL

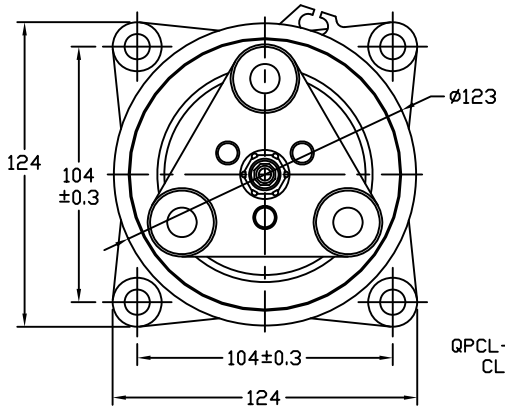

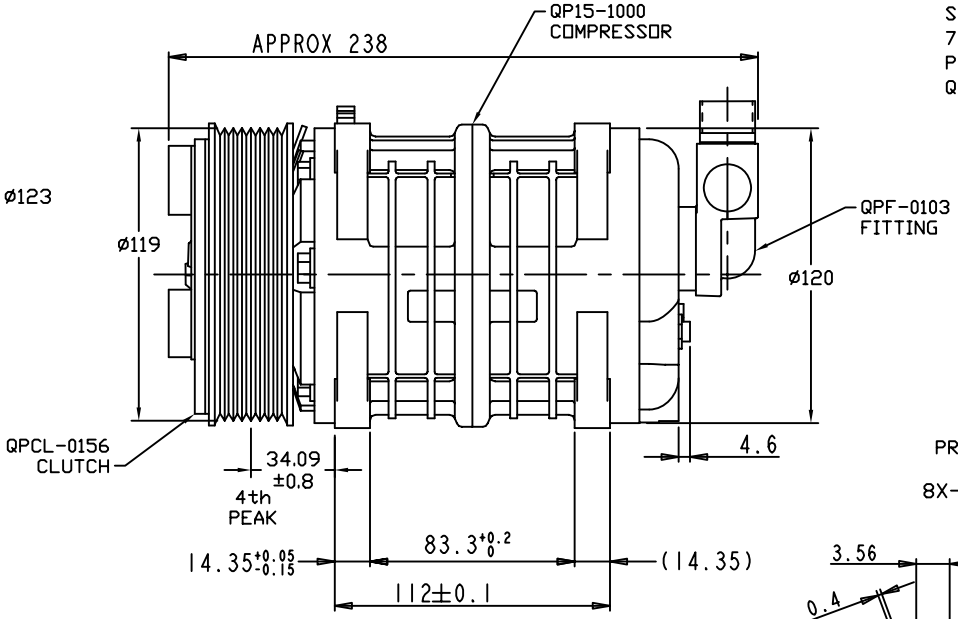

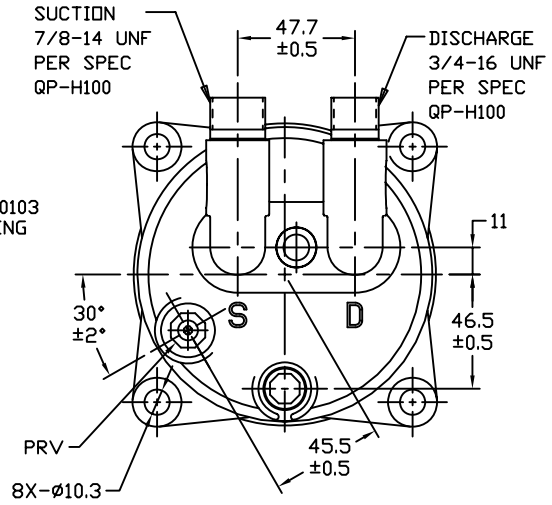

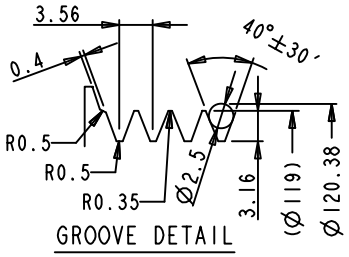

GROOVE DETAIL

CLUTCH SPECIFICATIONS:

1. VOLTAGE.....24VDC
2. BELT..... PV8
3. STATIC TORQUE
   INITIAL.....35 Nm (3.5 Kgfm)
   AFTER BURNISHING.....49 Nm (5 Kgfm)
4. MAX POWER CONSUMPTION.....45W @ 25°C
5. ROTATION DIRECTION.....CW OR CCW
6. WEIGHT.....2.30 Kg

COMPRESSOR SPECIFICATIONS:

1. MODEL.....QP-15HD
2. NUMBER OF CYLINDERS.....6
3. BORE X STROKE.....36 X 24.0 mm
4. DISPLACEMENT.....146.7 cm^3/REV
5. SPEED RANGE.....700 - 6000 RPM
6. ROTATION DIRECTION.....CW OR CCW
7. REFRIGERANT.....R-134a
8. LUBRICANT..... PAG 46 150+20cm3
9. WEIGHT.....4.4 Kg

UNLESS OTHERWISE SPECIFIED DIMENSIONS ARE IN MM. INTERPRET DIM AND TOL PER ASME Y14.5M - 1994

THIRD ANGLE PROJECTION

FINISH

CAD GENERATED DRAWING, DO NOT MANUALLY UPDATE

DRAWN	GLB	DATE 12/14/09
CHECKED		
APPROVED		
ENG APPVL		

QUE PRODUCTS, LLC

TITLE
COMPRESSOR ASSEMBLY
QP15HD V-3/4 7/8
PV8 119mm 24V 3-EYE

SIZE	CODE IDENT NO	DWG NO	REV
A		QP15-1333	

SCALE NONE | SHEET 1 OF 1