REVISIONS				
CHANGE ORDER	LTR	DESCRIPTION	DATE	APPROVED
Q09035	1	ADDED TOLERANCES & PART NO'S	10/23/09	

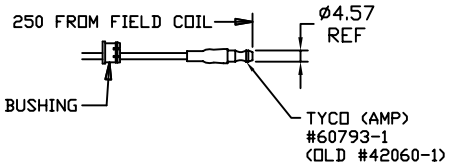

TERMINAL LEAD DETAIL

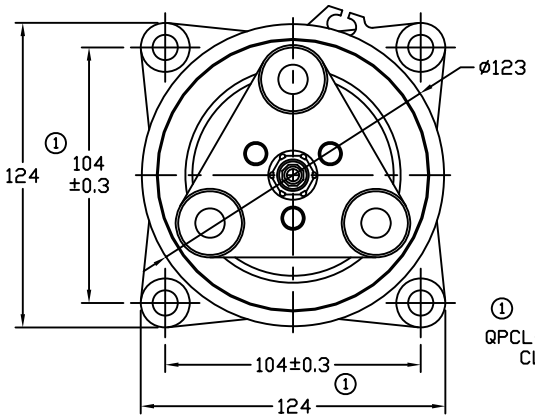

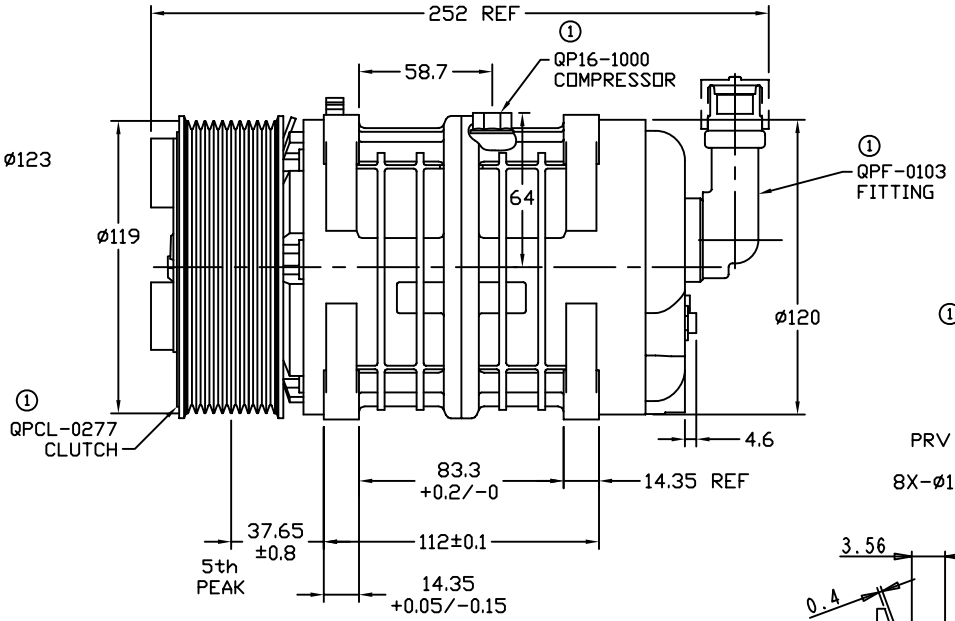

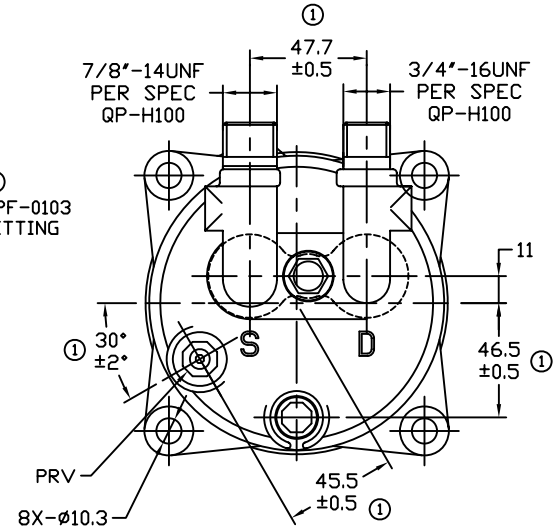

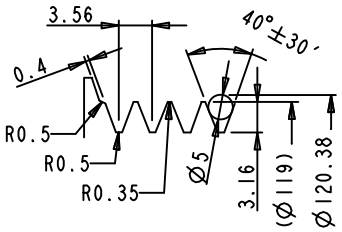

GROOVE DETAIL

CLUTCH SPECIFICATIONS:

1. VOLTAGE..... 12VDC
2. BELT..... PV10
3. STATIC TORQUE
   INITIAL.....35 Nm (3.5 Kgfm)
   AFTER BURNISHING.....49 Nm (5 Kgfm)
4. MAX POWER CONSUMPTION.....45W @ 25°C
5. ROTATION DIRECTION.....CW OR CCW
6. WEIGHT.....2.28 Kg

COMPRESSOR SPECIFICATIONS:

1. MODEL..... QP16
2. NUMBER OF CYLINDERS.....6
3. BORE X STROKE.....36 X 26.7 mm
4. DISPLACEMENT.....162.9 cm^3/REV
5. SPEED RANGE.....700 - 6000 RPM
6. ROTATION DIRECTION.....CW OR CCW
7. REFRIGERANT.....R-134a
8. LUBRICANT..... PAG 46 180+20cm3
9. WEIGHT.....4.7 Kg

UNLESS OTHERWISE SPECIFIED DIMENSIONS ARE IN MM. INTERPRET DIM AND TOL PER ASME Y14.5M - 1994

THIRD ANGLE PROJECTION

FINISH

CAD GENERATED DRAWING, DO NOT MANUALLY UPDATE

DRAWN	DATE
GLB	06/24/09
CHECKED	
APPROVED	
ENG APPVL	

QUE PRODUCTS, LLC

TITLE: COMPRESSOR ASSEMBLY QP16HD, V 3/4 - 7/8 PV10 119mm 12V 3-EYE

SIZE	CODE IDENT NO	DWG NO	REV
A		QP16-1706	1

SCALE NONE | SHEET 1 OF 1